FEMALE END VIEW (J1–J8)

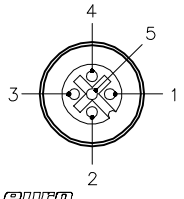

CABLE LENGTH	TOLERANCE *
ALL LENGTHS	+ 4% (OR 50mm) OF LENGTH – 0% (OR 0mm) OF LENGTH WHICHEVER IS GREATER
STRIP LENGTH	**TOLERANCE ***
0–7mm	±0.5mm
8–29mm	±1.0mm
30–49mm	±2.0mm
50–69mm	±3.0mm
70–100mm	±4.0mm
OVER 100mm	±5.0mm
* UNLESS OTHERWISE SPECIFIED	

SPECIFICATIONS	
CABLE DATA	
NUMBER OF CONDUCTORS [AWG]	3x18 AWG/16x22 AWG
CONDUCTOR INSULATION MATERIAL	PVC
MATERIAL	
HOUSING/COLOR	NYLON/BLACK
RECEPTACLE/PLATING	STAINLESS STEEL/PASSIVATED
CONTACT CARRIERS/COLOR	NYLON/BLACK
CONTACTS/PLATING	BRASS/GOLD
SEALING RING	FKM/FPM
ELECTRICAL DATA	
OPERATING VOLTAGE	10–48 VDC
OPERATING CURRENT	4.0 AMPS PER PORT, 9.0 AMPS TOTAL
LED CURRENT	12mA MAX AT 48VDC SUPPLY VOLTAGE(PER LED)
MECHANICAL DATA	
PROTECTION CLASS to DIN 40050	IP 67 – ONLY WHEN ALL RECEPTACLES ARE COVERED WITH PLUGS OR CONNECTED
OPERATING TEMPERATURE	–30°C to +80°C (–25°F to +176°F)

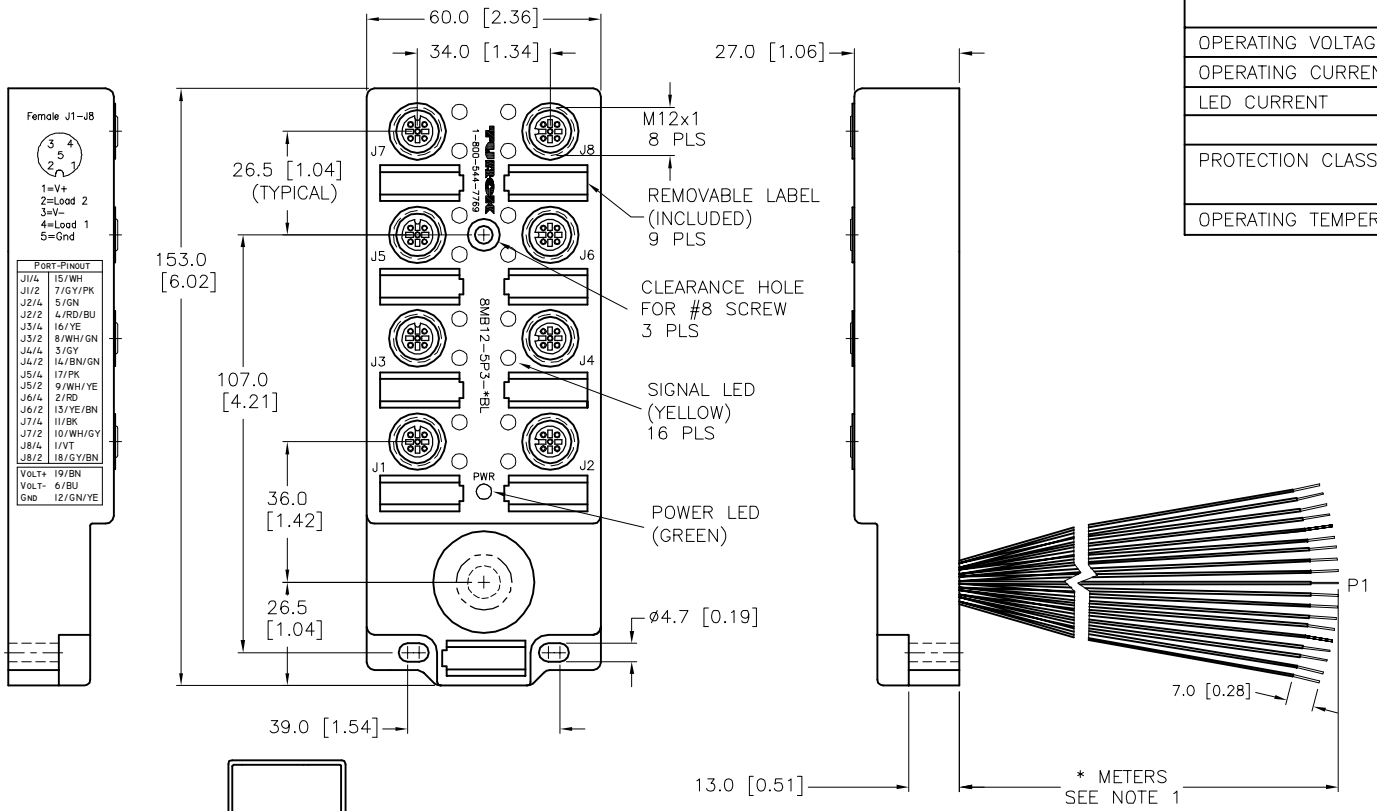

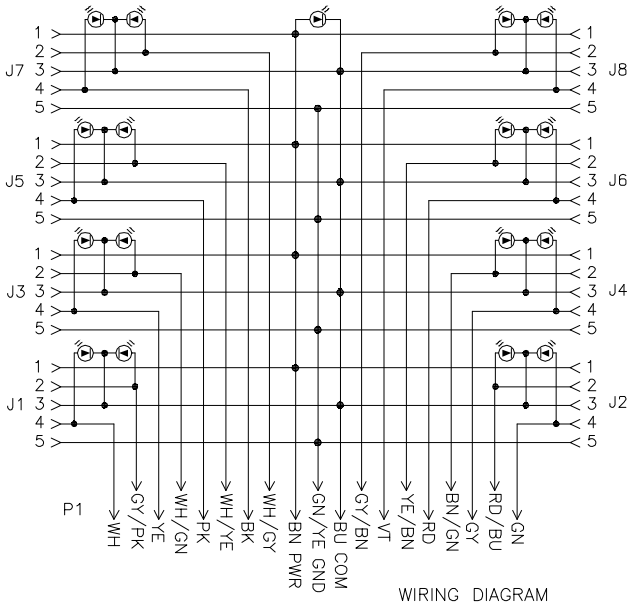

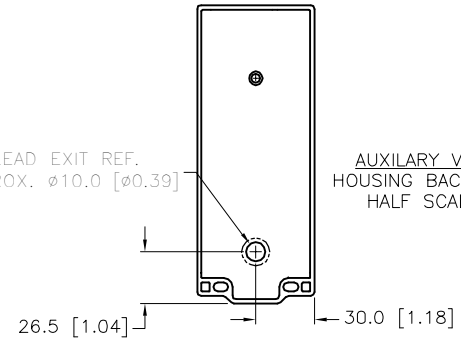

AUXILARY VIEW
HOUSING BACKSIDE
HALF SCALE

CLOSURE CAPS
(2 INCLUDED)

SOURCE DRAWING - FOR REFERENCE ONLY

NOTES:

1. "*" INDICATES CABLE LENGTH IN METERS. CONTACT TURCK TO ORDER SPECIFIC LENGTHS.

REV	DESCRIPTION	BY	DATE	ECO NO.
D	UPDATE PHONE NUMBER	KB	06/03/26	500000012610

RELATED DOCUMENTS
1.
2.
3.
4.

3RD ANGLE PROJECTION

THIS DRAWING IS CONFIDENTIAL AND THE PROPERTY OF TURCK INC. USE OF THIS DOCUMENT WITHOUT WRITTEN PERMISSION IS PROHIBITED.

TURCK

3000 CAMPUS DRIVE
MINNEAPOLIS, MN 55441
1–800–544–7769
(763) 553–7300
(763) 553–0708 fax
www.turck.us

MATERIAL: SEE SPECIFICATIONS

FINISH: SEE SPECIFICATIONS

ALL DIMENSIONS DISPLAYED ON THIS DRAWING ARE FOR REFERENCE ONLY

CONTACT TURCK FOR MORE INFORMATION

DRFT: RWC | DATE: 11/13/07
APVD: | SCALE: 1=2.0

UNIT OF MEASUREMENT
MILLIMETER [INCH]
DO NOT SCALE THIS DRAWING

DESCRIPTION: 8MBV12–5P3–*BL

IDENTIFICATION NO.:

REV: D

FILE: 777020591

SHEET 1 OF 1